Product Specification Sheet for:

940001600R - Senior Sliding Labyrinth Type 2, Two-sided

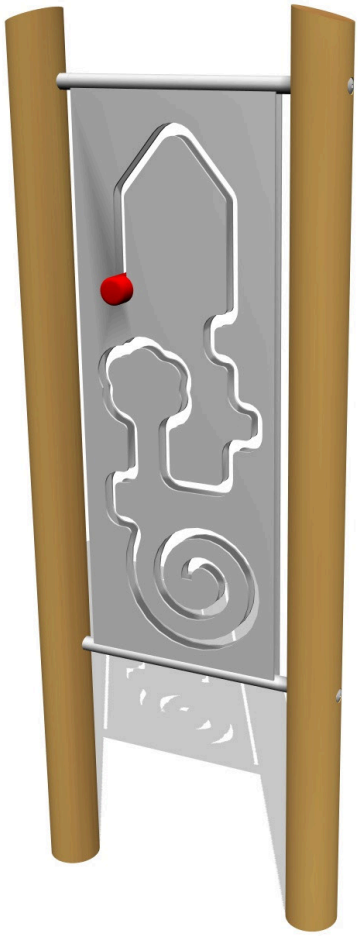

Compliant to EN1176

Product Name	Senior Sliding Labyrinth Type 2, Two-sided
Product Code	940001600R
Material	BS EN 350-02 Class 1 Robinia Timber
Product Category	Leisure & Sport
Age Range	10+
Product Type	Senior Fitness
Fixings	Stainless Steel Fixings & Galvanised Plates
Free Space Area m2	
Free Space Loosefill m2	
FFH	
Area Required (LxW)	
Grassmat Total (M²)	
Edge Length LM	

Plan View

Not to scale

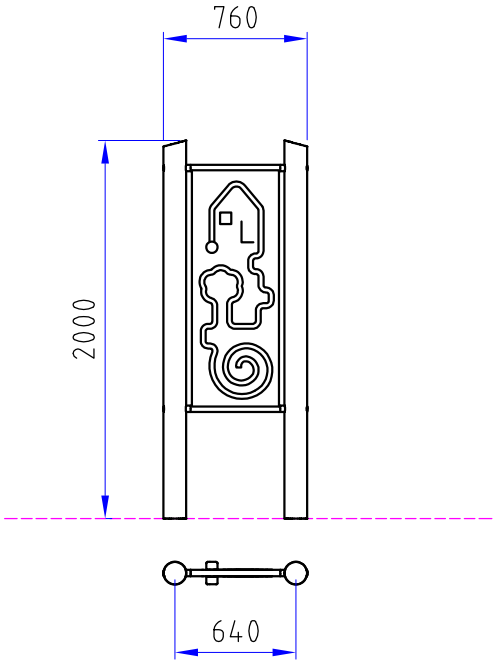

Product Description

The sliding labyrinth, which is upright and usable on both side. Moving the disk through the guided channel. The user has to make different and small changes in direction, helping them increase their fine motor skills and improving movement in their forearms and wrists.

www.jupiterplay.co.uk
info@jupiterplay.co.uk

HEAD OFFICE: 0131 445 7989
SOUTHERN OFFICE: 0115 969 9859

Company No. SC200761
© Jupiter Play & Leisure Ltd. 2014.